COPYRIGHT

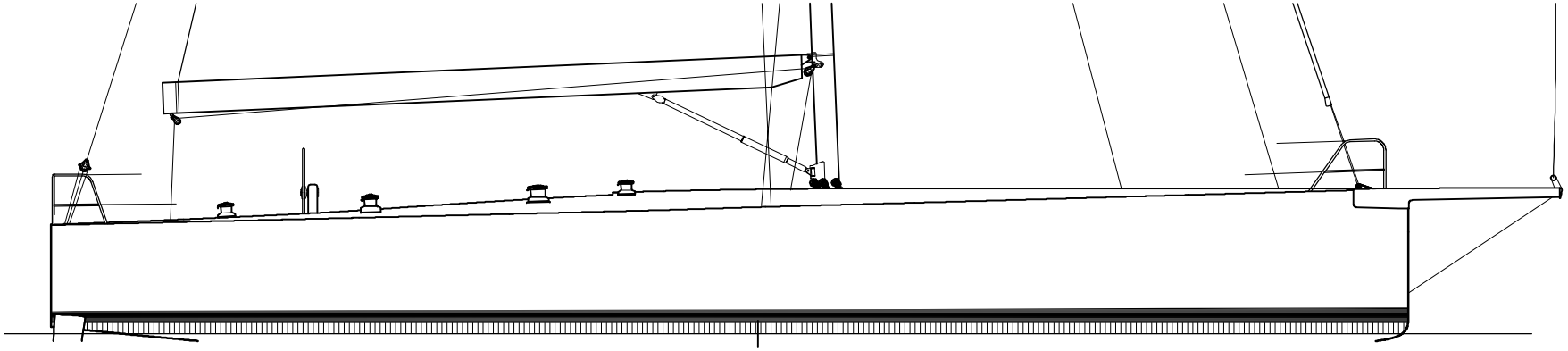

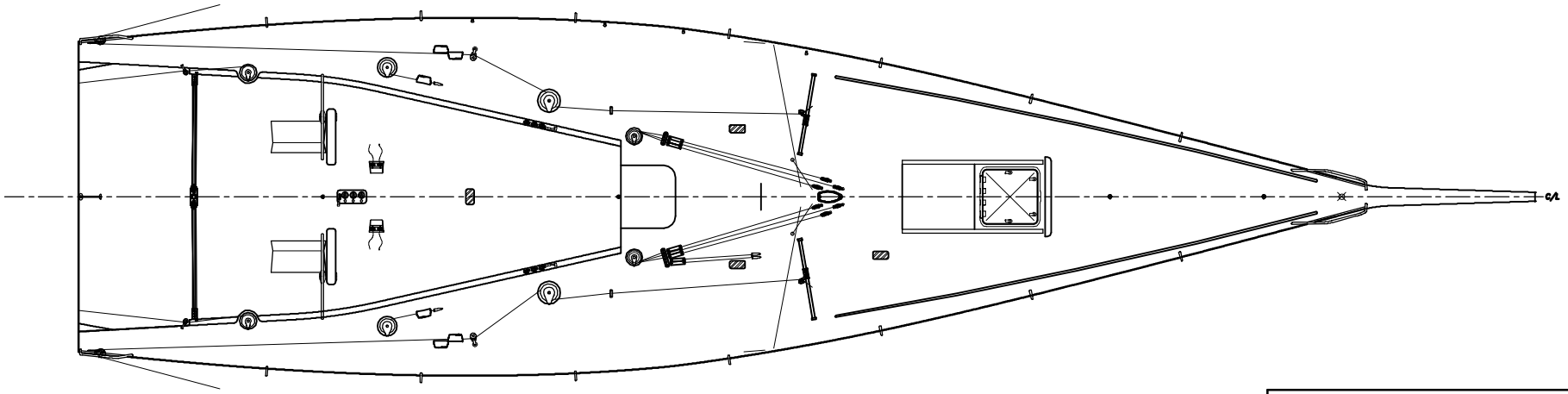

FARR®

FARR YACHT DESIGN, LTD.

IRC 55

© 9/30/08

SCALE NOT TO SCALE	DESIGN No. 642
TITLE PROMO DECK LAYOUT	DRAWING No. 642 PR 110